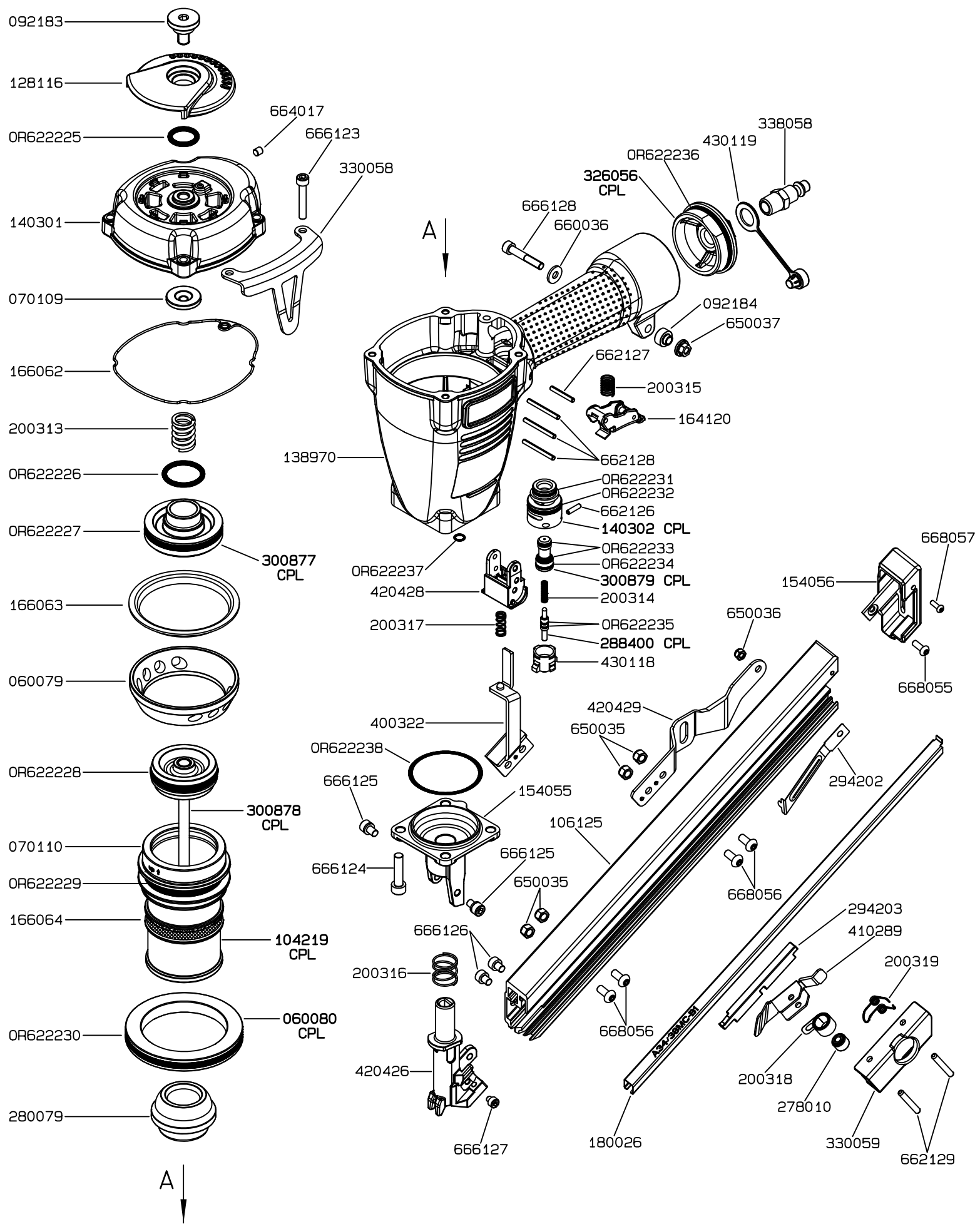ESP	MACHINE CODE	MACHINE CODE	MACHINE CODE	MACHINE CODE
0	11366			
DESC.	F36 RHN33-38 MTL